NATIONWIDE CHILDREN'S HOSPITAL℠

700 Children's Drive
Columbus, Ohio 43205-2696
nationwidechildrens.org

MEDICATIONS: HOW TO GIVE BY MOUTH

Getting infants and young children to take medicine can be very difficult. Here are some suggestions and safety tips that may make giving medicine easier for both you and your child.

REMEMBER

- Read the label **each time** before you give this medicine.
- If the medicine is a liquid, use a pediatric measuring device (available at the pharmacy) or measuring spoon to measure the exact dose. Do not measure liquid medicines in kitchen spoons.
- Give the **exact amount** of medicine that your doctor ordered.
- Stay with your child until he or she has swallowed the dose of medicine.
- The doctor has prescribed this medicine **only** for your child. **Do not** give it to anyone else.

A POSITIVE APPROACH

Your approach to your child taking medicine is very important. A child can sense your feelings. If you say, "You will have to take your medicine," but you feel sorry for the child or hesitate, he may get the idea that you don't really mean what you say. Children usually respond to what they **think you mean**, not what you **say**. A matter-of-fact approach is usually best. This means you expect the child to take the medicine just as you expect him to put on his coat before going out in cold weather. **Be consistent!**

Picture 1 When giving liquid medicine, hold your baby on your lap in a nearly upright position.

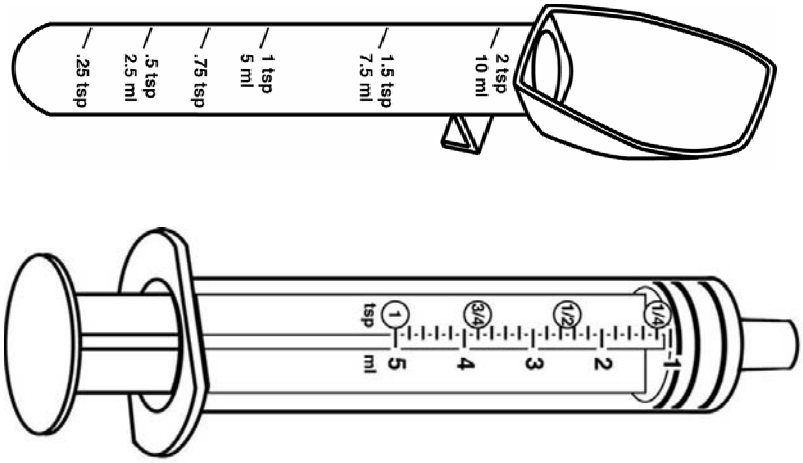

Picture 2 Use a pediatric measuring device for liquid medicines. Do not use ordinary kitchen spoons.

Copyright 1984-2004, Nationwide Children's Hospital

SAFETY TIPS FOR INFANTS

- Do not squirt medicine directly at the back of the baby's throat. This may cause the child to choke.
- Give small amounts of medicine at a time to avoid choking.
- Let baby swallow all the medicine in his mouth before you give more medicine.

TIPS FOR GIVING MEDICINE TO AN INFANT

Here are some ways to give medicine to a baby. Choose the one that you think will work with your baby. If that method does not work, try another one.

- Give the medicine right before feeding the baby unless your doctor tells you not to. This way the baby is hungry and more likely to swallow the medicine.
- When giving medicine to an infant (newborn to one year), use his natural reflexes (such as sucking) whenever possible.
- Stroke the infant's cheek gently. This will usually get him to open his mouth. When he does open his mouth, put a small amount of medicine on either side of his tongue. Let him swallow, then repeat the process until the dose of medicine is gone. Hold the infant in a nearly upright position. If your infant struggles, **gently** hold one arm and place his other arm around your waist. Hold baby close to your body.
- Draw up the correct amount of medicine into an oral syringe (a syringe without a needle). Let your infant suck the medicine out of the syringe.
- Mix the medicine with a ***small amount*** (1 to 2 teaspoons) of applesauce or pears and give it with a spoon. This is a good way to give pills that have been crushed well. (To crush a pill, place it between two spoons and press the spoons together.)
- **Avoid mixing medicine with foods your child must have**. The child may begin to dislike the foods he needs.
- Some medicines can be diluted in a ***small amount*** of juice or sugar water. Follow the instructions from your doctor, nurse, or pharmacist. Do not put medicine in a full bottle or cup in case the infant does not drink very much.

GIVING MEDICINE TO A CHILD 1 YEAR AND OLDER

Your attitude toward giving medicine is especially important with young children. These are some ways to give medicine. Try one that you think will work with your child. If that method does not work, try another one.

- Give the medicine straight from a pediatric measuring device (Picture 2, page 1). (Check at your local pharmacy for special measuring spoons and droppers for giving medicine to children.) Household spoons vary in size and should not be used to measure medicine.
- Mix the medicine with a **small amount** (1 to 2 teaspoons) of juice or sweetened water. Give with a spoon or let your child drink it.
- Try mixing the medicine with a **small amount** of ice cream, pudding, or jelly. Do not use foods your child must have, such as meat or vegetables.
- Try mixing the medicine with small amounts of food that have a strong flavor. This helps hide the taste of the medicine. Mixing with sweet or cold foods may also help.
- Explain to your child why he needs to take the medicine in words he can understand. (For example, "This medicine will make your tummy stop hurting.")

GIVING MEDICINE TO A CHILD 1 YEAR AND OLDER, continued

- Whenever possible let the child choose how and when to take the medicine (or which one to take first). Let him hold the spoon, cup, or syringe and take it himself.
- Praise your child every time he takes the medicine without a struggle. (Giving a special sticker works well for some children.)
- Try to ignore your child's behavior when he does not cooperate.
- Never give medicine right after disciplining the child. He may think the medicine is punishment.
- **Never threaten your child** with a "shot" if he does not take the medicine.
- **Never call medicine "candy."** Call it medicine.
- Give a drink of water after your child takes the medicine.

COMPARING MEASURING SPOONS TO METRIC MEASUREMENTS

Measuring Spoon		Metric (1 mL = 1 cc.)
1/4 teaspoon	=	1 1/4 mL
1/2 teaspoon	=	2 1/2 mL
3/4 teaspoon	=	3 3/4 mL
1 teaspoon	=	5 mL
1 tablespoon	=	15 mL
1 ounce	=	30 mL

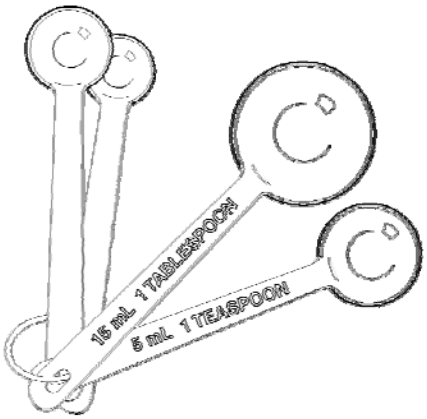

Picture 3 Measuring spoons

IF YOU FORGET TO GIVE A DOSE

- If you forget to give a dose of the medicine, give it as soon as you remember. If it is almost time for the next dose, do not give the missed dose at all and do not double the next dose.
- Call your doctor or nurse before giving a missed dose if it has been more than one hour since the dose was missed; or _____.

IF A DOSE IS VOMITED

- If your child gags or chokes and spits out the dose **before swallowing it**, let the child calm down and then give the same amount once more.
- If the dose is vomited (thrown up), check with your doctor before repeating the dose.

STORAGE OF MEDICINE

- **Store all medicine out of the reach of children.**
- Light and moisture make most medicines less effective. Keep the container tightly capped and store in a **dark**, dry place (not in the bathroom or above the kitchen sink).
- Some medicines need to be kept in the refrigerator. Make sure these have a safety cap.
- Always keep medicine in the labeled container it came in.
- If your childcare provider needs to give the medicine, ask the pharmacist for 2 labeled containers.

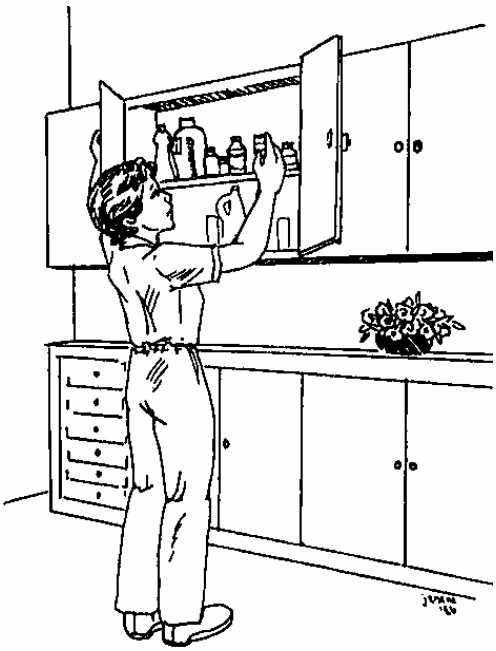

Picture 4 Store all medicine out of the reach of children.

- If you carry the medicine in your purse, keep it in its childproof container and keep your purse out of the reach of children.
- Do not use any medicine after the expiration date printed on the container.
- If your doctor decides the medicine is no longer needed, flush the remaining medicine down the toilet.
- Remind guests in your home to keep their medicines out of the reach of children.

SAFETY TIPS AND OTHER ADVICE

- Do not stop giving this medicine or change the amount given without first talking with your child's doctor.
- Do not give non-prescription medicines (such as acetaminophen, ibuprofen, aspirin, antacids, or cold medicines) without checking with your child's doctor first.
- Learn the name, spelling, dosage, and side effects of any medicine your child is taking.
- Bring all your child's medicines with you (in the original containers) whenever your child sees a doctor, goes to an emergency room, or is admitted to the hospital. This helps doctors who may not know your child.
- Tell your child's teacher, school nurse, school coach, baby-sitter, and others that your child is taking this medicine and what side effects to watch for.
- If the medicine looks different than usual, ask the pharmacist if it is the right medicine before giving it to your child.
- **If your child takes too much of this medicine, or if someone else takes this medicine, first call the Central Ohio Poison Center** at 1-800-222-1222. They will tell you what to do.
- The doctor has prescribed this medicine for your child **only**. Do not give to anyone else.

FOLLOW-UP APPOINTMENTS

Your child's follow-up appointment is on (date) _____ at (time) _____.

If you have any questions, be sure to call your child's doctor or pharmacist.